FM-35/37 block diagram with wire colors and pin numbers

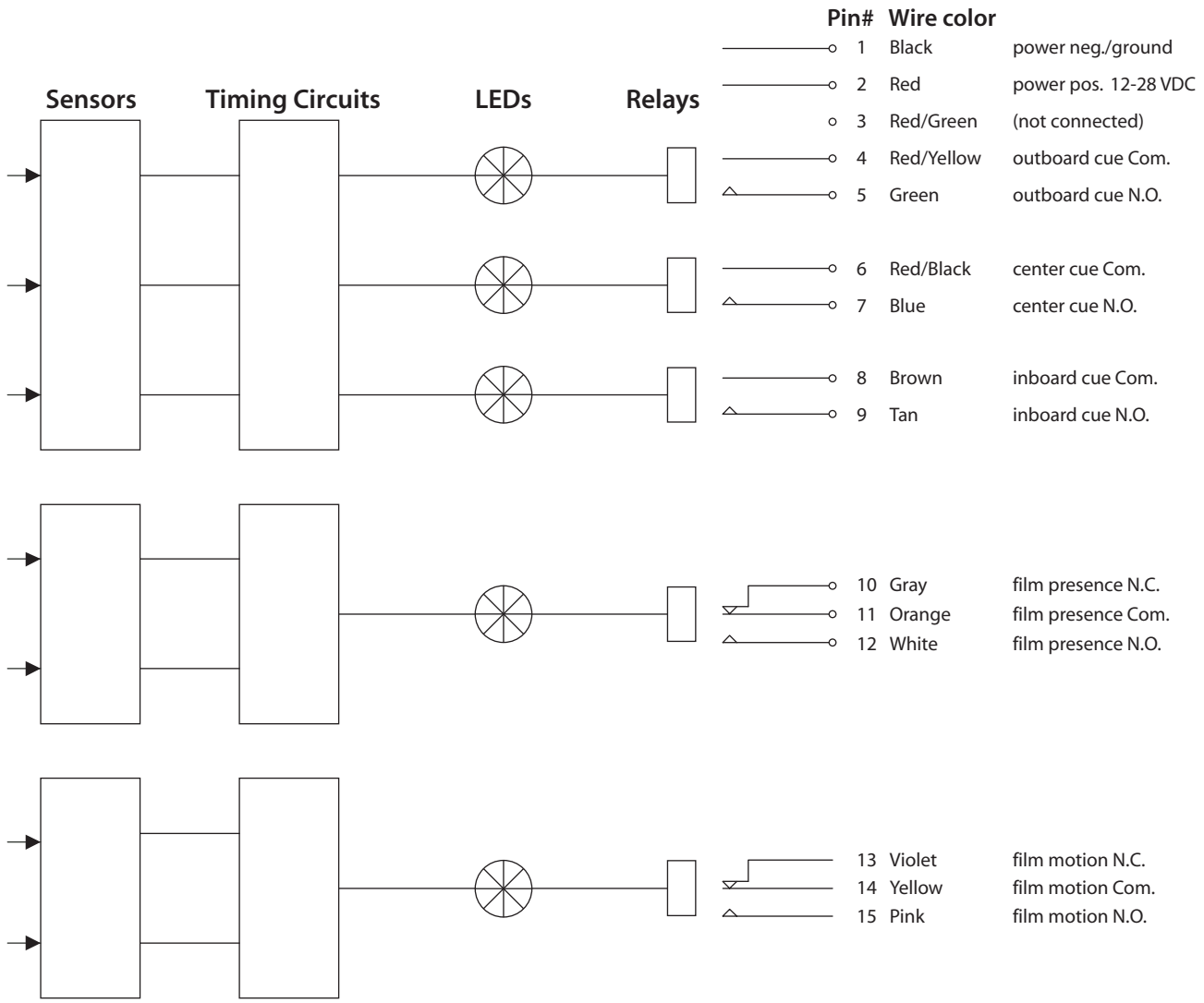

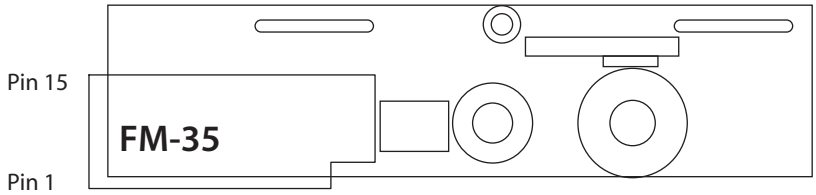

Copyright © Component Engineering, All Rights Reserved